What is the physical interpretation for the Photoelectric Effect?

The photoelectric effect is a phenomenon no mathematician, from Hertz to Einstein and from Dirac to Hawking, ever understood. The reason no one in Mathematics understands the mechanism underlying the photoelectric effect is that mathematicians don't care about qualitative explanations and dismiss them as 'semantics' or 'philosophy' or something along those lines. They merely describe the unseen event mathematically and are done with the problem.

In order to understand the mechanism that underlies the photoelectric effect it is absolutely necessary to understand the physical mechanisms of light and electricity. And in order to understand these mechanisms it is absolutely necessary to get the invisible mediators right. And that's where Mathematical 'physics' has failed completely and miserably. To this day, those graduating from colleges around the world simulate everything with discrete particles. Even the waves that are used to simulate phenomena are themselves simulated by particles.

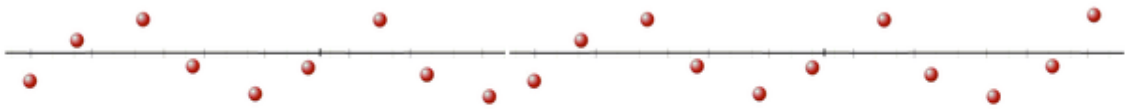

Um... what compels the little photon ball to oscillate up and down around an imaginary axis?

Let's make a new set of proposals that never occurred to the mathematicians from Newton to Hawking. What if electricity is not a flow of electron bullets? What if electricity is more like a drill bit twirling in place?

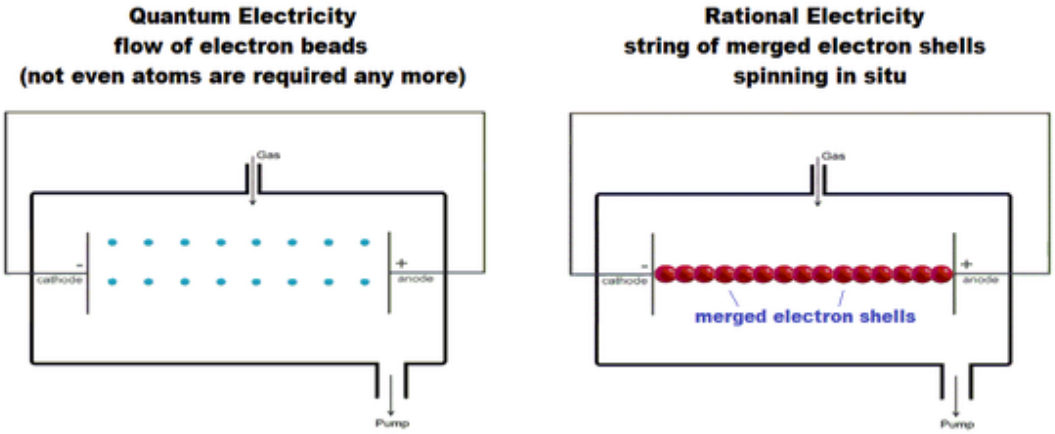

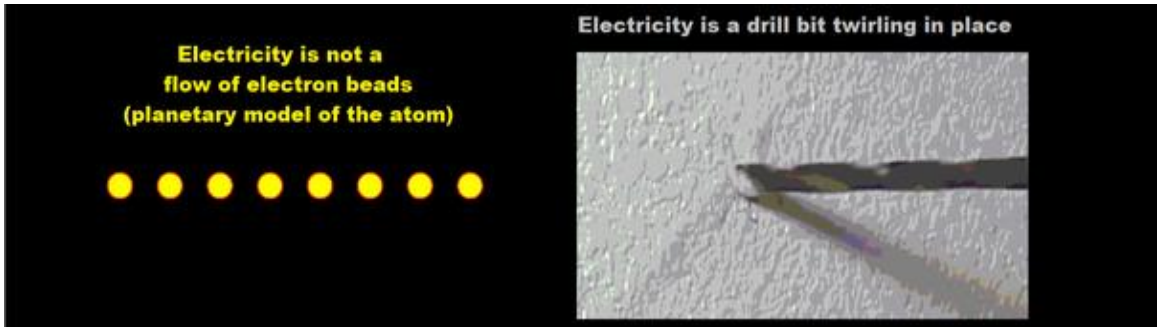

And what if light is not a flow of particles magically moving up and down to simulate a transverse wave. What if light is mediated by a DNA-like twined pair of threads: a rope? What if all atoms in existence are physically interconnected?

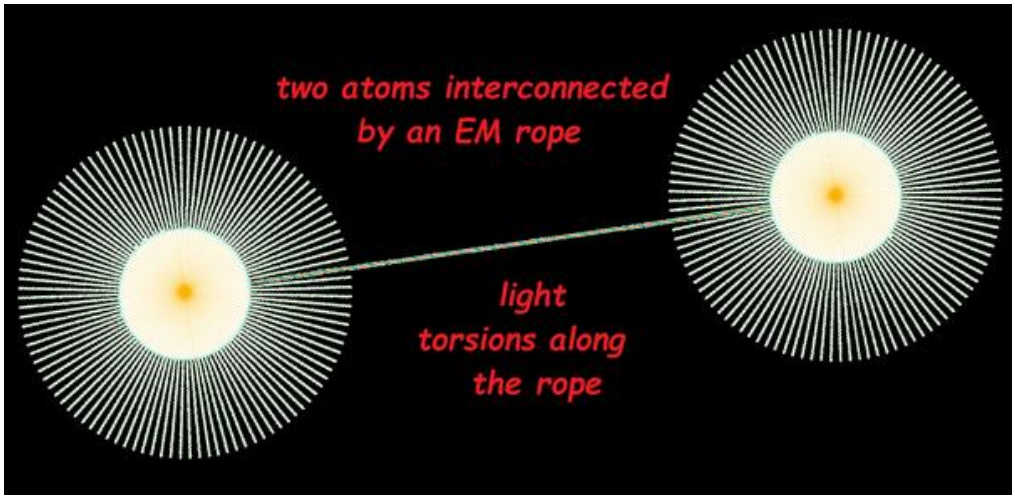

Well, if you shine your light on polished metal, it is obvious that you get a ‘current’ ‘flowing’. The party-line mechanism is that a photon bullet strikes an electron bead and compels this 0D ‘ball’ to travel to another atom where it dislodges a valence electron which then does the same thing to another. You have an avalanche: a flow of beads. Ergo, electricity!

The problem is visualizing this planetary atom BEFORE anything starts moving. Why does the electron bead remain faithful to the nucleus to begin with? What is this ‘thingy’ where positive attracts negative? What does it mean in physical terms?

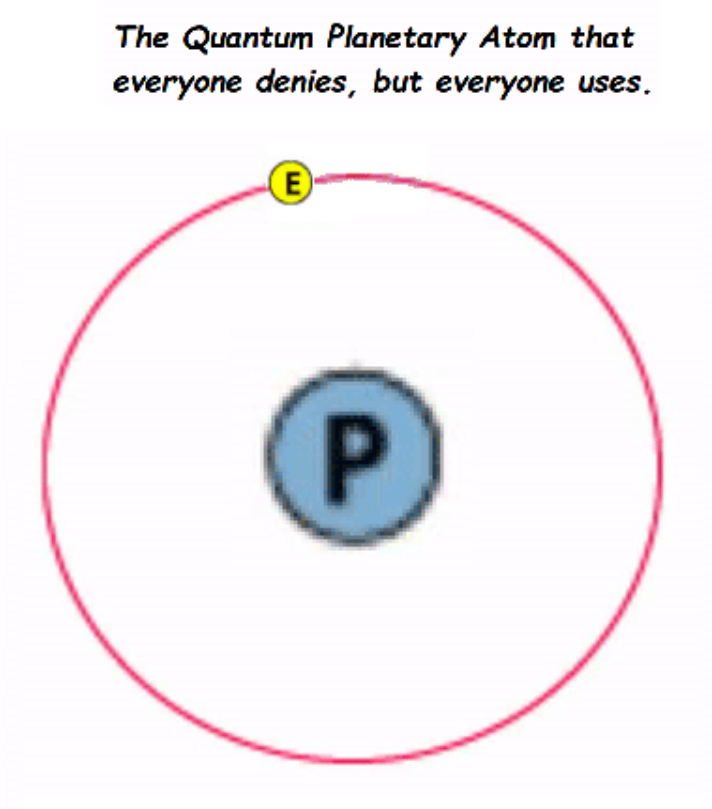

That’s where Quantum dies! It can never provide a rational explanation to those types of questions.

With the Rope Model, on the other hand, there is no flow of discrete particles, but rather physical interconnectedness between atoms. The EM rope binds any two atoms. An atom pumps back and forth, expanding and contracting consistent with the phenomenon known as quantum jump. This titillating heart torques the rope.

What happens when high frequency is suddenly induced upon a series of atoms whose electron shells are physically merged with each other?
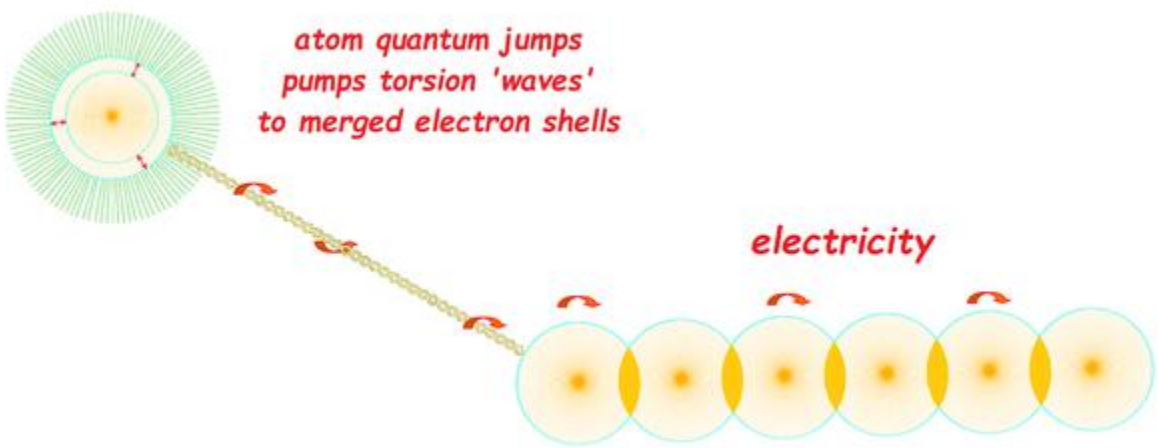
The signal stimulates this row of interconnected electron shells to spin. Light has induced the atoms comprising the polished metal to ‘conduct’ electricity